Cambridge Assessment International Education

Cambridge International AS & A Level

CANDIDATE NAME

CENTRE NUMBER

CANDIDATE NUMBER

7026467468

PHYSICS **9702/22**

Paper 2 AS Level Structured Questions **May/June 2025**

1 hour 15 minutes

You must answer on the question paper.

No additional materials are needed.

INSTRUCTIONS

- Answer **all** questions.
- Use a black or dark blue pen. You may use an HB pencil for any diagrams or graphs.
- Write your name, centre number and candidate number in the boxes at the top of the page.
- Write your answer to each question in the space provided.
- Do **not** use an erasable pen or correction fluid.
- Do **not** write on any bar codes.
- You may use a calculator.
- You should show all your working and use appropriate units.

INFORMATION

- The total mark for this paper is 60.
- The number of marks for each question or part question is shown in brackets [ ].

This document has **20** pages. Any blank pages are indicated.

© UCLES 2025

[Turn over

Data

acceleration of free fall	g	=	$9.81\ \text{m s}^{-2}$
speed of light in free space	c	=	$3.00 \times 10^{8}\ \text{m s}^{-1}$
elementary charge	e	=	$1.60 \times 10^{-19}\ \text{C}$
unified atomic mass unit	1 u	=	$1.66 \times 10^{-27}\ \text{kg}$
rest mass of proton	m_p	=	$1.67 \times 10^{-27}\ \text{kg}$
rest mass of electron	m_e	=	$9.11 \times 10^{-31}\ \text{kg}$
Avogadro constant	N_A	=	$6.02 \times 10^{23}\ \text{mol}^{-1}$
molar gas constant	R	=	$8.31\ \text{J K}^{-1}\ \text{mol}^{-1}$
Boltzmann constant	k	=	$1.38 \times 10^{-23}\ \text{J K}^{-1}$
gravitational constant	G	=	$6.67 \times 10^{-11}\ \text{N m}^2\ \text{kg}^{-2}$
permittivity of free space	ε_0	=	$8.85 \times 10^{-12}\ \text{F m}^{-1}$
	$(\frac{1}{4\pi\varepsilon_0}$	=	$8.99 \times 10^{9}\ \text{m F}^{-1})$
Planck constant	h	=	$6.63 \times 10^{-34}\ \text{J s}$
Stefan–Boltzmann constant	σ	=	$5.67 \times 10^{-8}\ \text{W m}^{-2}\ \text{K}^{-4}$

Formulae

uniformly accelerated motion	s	=	$ut + \frac{1}{2}at^2$
	v^2	=	$u^2 + 2as$
hydrostatic pressure	Δp	=	$\rho g \Delta h$
upthrust	F	=	$\rho g V$
Doppler effect for sound waves	f_o	=	$\frac{f_\text{s} v}{v \pm v_\text{s}}$
electric current	I	=	$Anvq$
resistors in series	R	=	$R_1 + R_2 + ...$
resistors in parallel	$\frac{1}{R}$	=	$\frac{1}{R_1} + \frac{1}{R_2} + ...$

DO NOT WRITE IN THIS MARGIN

BLANK PAGE

DO NOT WRITE IN THIS MARGIN
DO NOT WRITE IN THIS MARGIN
DO NOT WRITE IN THIS MARGIN
DO NOT WRITE IN THIS MARGIN
DO NOT WRITE IN THIS MARGIN

1 **(a)** Table 1.1 lists some physical quantities. Identify with ticks (✓) which quantities are vectors and which are scalars.

Table 1.1

quantity	scalar	vector
acceleration		
displacement		
gravitational potential energy		
speed		
temperature		

[2]

(b) A constant resultant force F acts on a car of mass m. The car moves from rest with constant acceleration a along horizontal ground. When the car has displacement s, the speed of the car is v.

(i) Using the concept of work done on the car, show that the kinetic energy E_K of the car is given by the equation

$$E_K = \frac{1}{2}mv^2.$$

[3]

(ii) The mass of the car is 920 kg. At time $t = 0$, the car is at rest. At time $t = 5.8$ s, its velocity is $17\,m\,s^{-1}$.

Calculate the kinetic energy of the car at time $t = 5.8$ s.

kinetic energy = ... J [1]

DO NOT WRITE IN THIS MARGIN

(iii) Between time t = 0 and time t = 5.8 s, the work done against resistive forces is 4.7×10^4 J.

Determine the average output power of the car during this time.

power = ... W [3]

(iv) At time t = 5.8 s, the speed of the car becomes constant.

State and explain whether the output power of the car is greater than, less than or the same as the output power just before t = 5.8 s.

.....

..... [1]

[Total: 10]

DO NOT WRITE IN THIS MARGIN
DO NOT WRITE IN THIS MARGIN
DO NOT WRITE IN THIS MARGIN
DO NOT WRITE IN THIS MARGIN
DO NOT WRITE IN THIS MARGIN

2 **(a)** Define the moment of a force about a point.

.....

..... [1]

(b) A tree of mass 270 kg grows out of sloping ground and is supported by a post, as shown in Fig. 2.1.

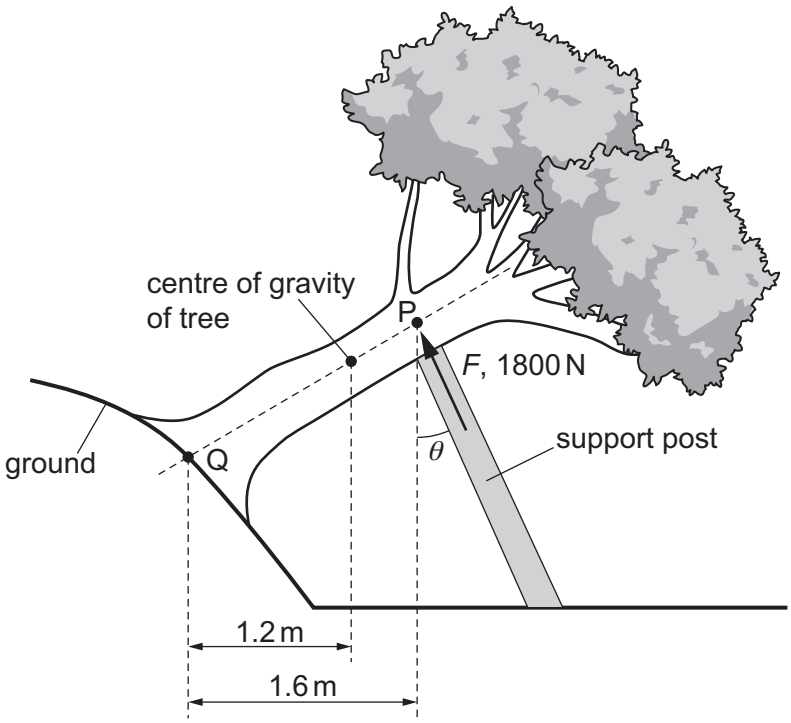

Fig. 2.1 (not to scale)

The ground applies a total force R on the tree at point Q.
The centre of gravity of the tree is a horizontal distance of 1.2 m from Q.
The post applies a force F of 1800 N perpendicular to the line PQ. The line of action of F passes through point P at an angle θ to the vertical. P is a horizontal distance of 1.6 m from Q.
The tree is in equilibrium and all forces act on the tree in the same plane.

(i) By taking moments about point Q, show that θ is 25°.

[3]

DO NOT WRITE IN THIS MARGIN

(ii) On Fig. 2.2, draw a labelled scale vector triangle to represent the forces acting on the tree. The weight of the tree has been drawn to scale.

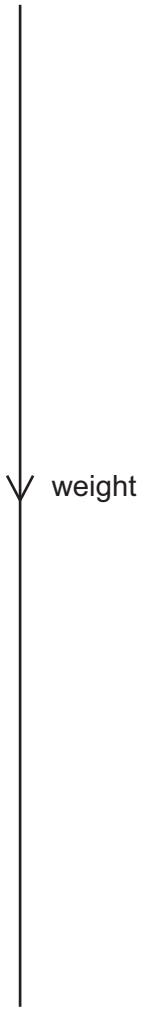

Fig. 2.2

[2]

(iii) The tree exerts a pressure of 150 kPa on the top of the post.

Determine the surface area of the tree in contact with the post.

area = ... m^2 [2]

[Total: 8]

DO NOT WRITE IN THIS MARGIN
DO NOT WRITE IN THIS MARGIN
DO NOT WRITE IN THIS MARGIN
DO NOT WRITE IN THIS MARGIN
DO NOT WRITE IN THIS MARGIN

3 Two progressive water waves X and Y travel along a straight line from point A to point B. The variation of displacement of the waves with distance from A at an instant in time is shown in Fig. 3.1.

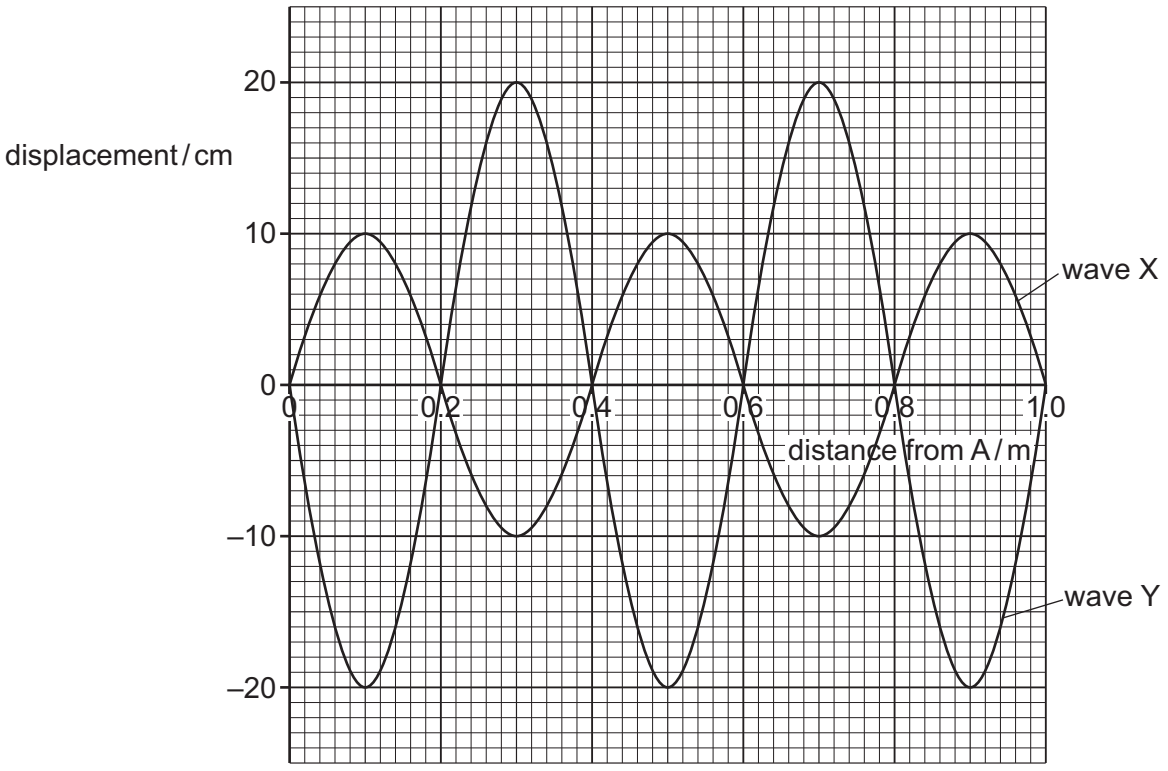

Fig. 3.1

(a) State the amplitude of wave X.

amplitude = ... cm [1]

(b) Both waves have frequency 16 Hz.

(i) Determine the speed of wave X.

speed = ... $m\,s^{-1}$ [2]

(ii) State and explain whether X and Y are coherent.

.....

.....

..... [1]

DO NOT WRITE IN THIS MARGIN

(c) Wave X and wave Y superpose to form a resultant wave.

On Fig. 3.2, sketch the variation of displacement of the resultant wave with distance from A at the instant of time shown in Fig. 3.1.

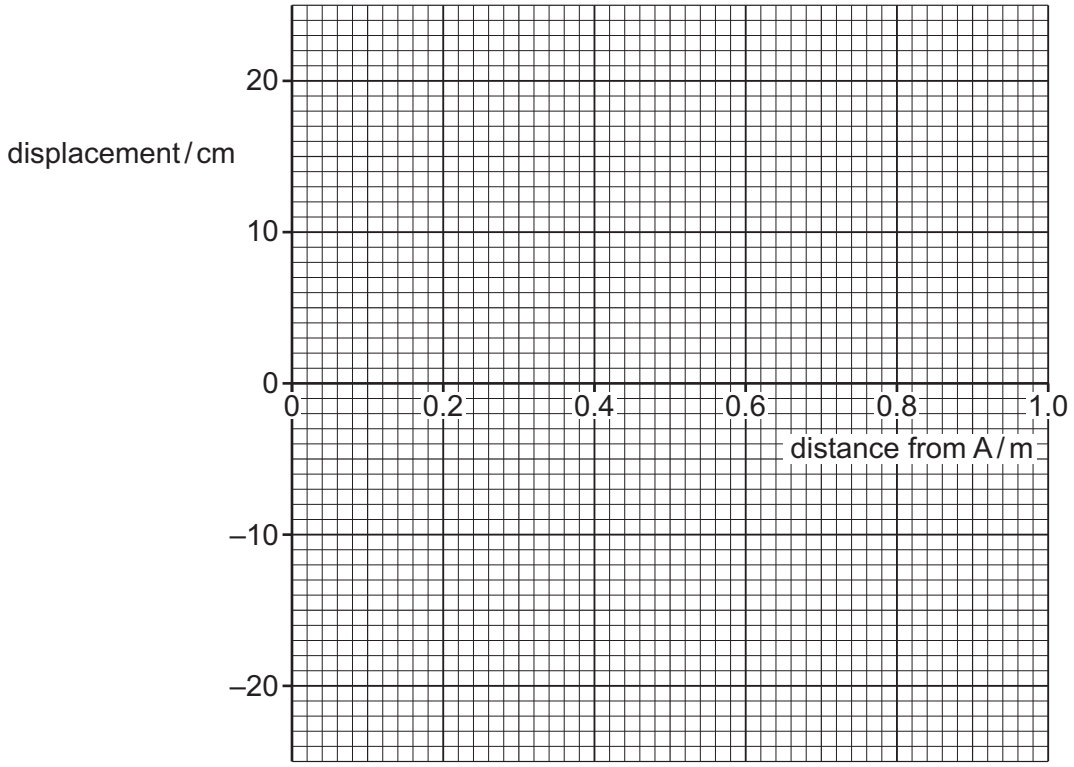

Fig. 3.2

[2]

(d) The intensity of wave X is I_X. The intensity of wave Y is I_Y.

Use Fig. 3.1 to determine the ratio $\frac{I_X}{I_Y}$.

ratio = ... [2]

[Total: 8]

DO NOT WRITE IN THIS MARGIN
DO NOT WRITE IN THIS MARGIN
DO NOT WRITE IN THIS MARGIN
DO NOT WRITE IN THIS MARGIN
DO NOT WRITE IN THIS MARGIN

4 A small ball is dropped from rest from height h_1 above the ground and falls vertically downwards. The ball collides with the ground and bounces back vertically upwards, reaching a maximum height h_2. Fig. 4.1 shows the ball just before and just after hitting the ground.

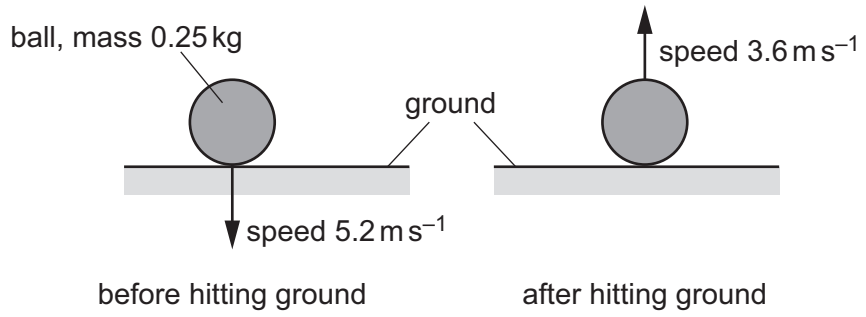

Fig. 4.1

The ball has mass 0.25 kg and is in contact with the ground for a time of 0.18 s.
Just before the ball hits the ground, it has speed 5.2 m s^{-1}. Just after it leaves the ground, it has speed 3.6 m s^{-1}.
Air resistance acting on the ball is negligible.

(a) State and explain whether the collision is elastic or inelastic.

.....

.....

..... [1]

(b) **(i)** Calculate the change in momentum of the ball during the collision with the ground.

change in momentum = ... kg m s^{-1} [2]

(ii) Determine the average force on the ball during the collision with the ground.

force = ... N [2]

DO NOT WRITE IN THIS MARGIN

(c) Calculate the ratio $\frac{h_2}{h_1}$.

ratio = ... [3]

[Total: 8]

DO NOT WRITE IN THIS MARGIN
DO NOT WRITE IN THIS MARGIN
DO NOT WRITE IN THIS MARGIN
DO NOT WRITE IN THIS MARGIN
DO NOT WRITE IN THIS MARGIN

5 **(a)** Define the Young modulus.

.....

..... [1]

(b) A wire of unstretched length 0.81 m is made of a metal with Young modulus 95 GPa. The wire obeys Hooke's law and has a constant cross-sectional area. Fig. 5.1 shows the force–extension graph for the wire.

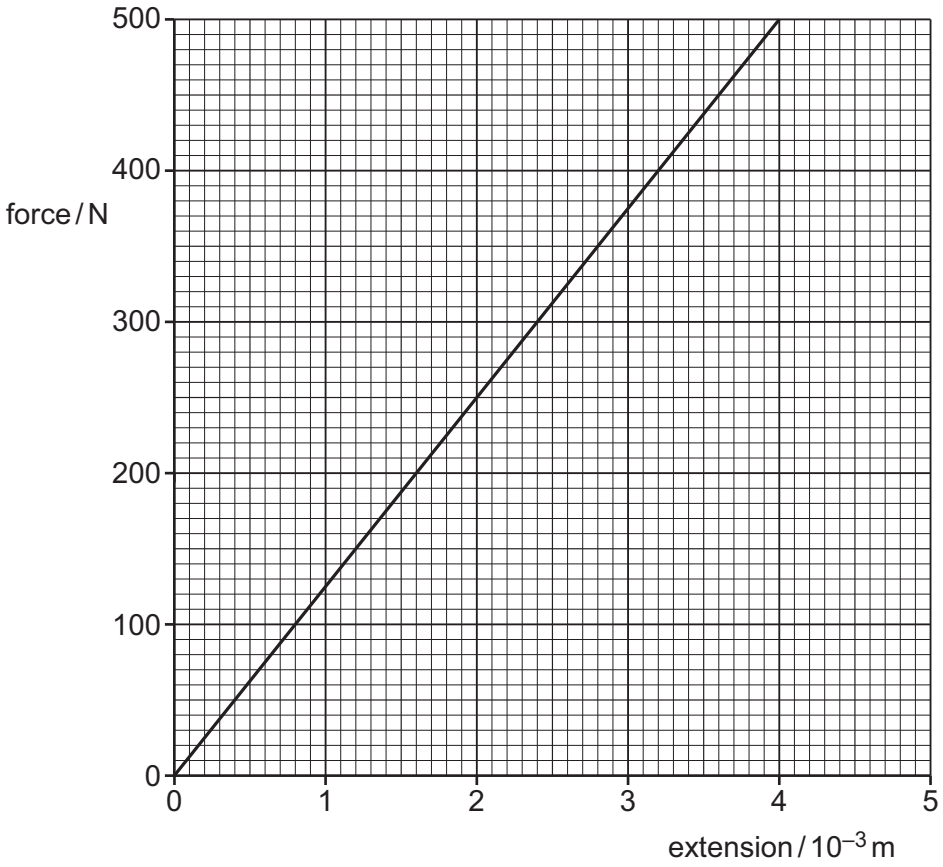

Fig. 5.1

(i) Determine the cross-sectional area of the wire.

area = ... m^2 [3]

DO NOT WRITE IN THIS MARGIN
DO NOT WRITE IN THIS MARGIN
DO NOT WRITE IN THIS MARGIN
DO NOT WRITE IN THIS MARGIN
DO NOT WRITE IN THIS MARGIN

(ii) The extension of the wire is initially 2.0×10^{-3} m.

Determine the work done to increase the extension of the wire to 3.0×10^{-3} m.

work done = ... J [3]

[Total: 7]

DO NOT WRITE IN THIS MARGIN
DO NOT WRITE IN THIS MARGIN
DO NOT WRITE IN THIS MARGIN
DO NOT WRITE IN THIS MARGIN
DO NOT WRITE IN THIS MARGIN

6 **(a)** Define electric potential difference across a component.

.....

..... [1]

(b) A circuit contains four resistors and a battery of electromotive force (e.m.f.) 8.0 V with negligible internal resistance. When the variable resistor has resistance *R*, the currents in the circuit are 0.030 A, I_1 and I_2, as shown in Fig. 6.1.

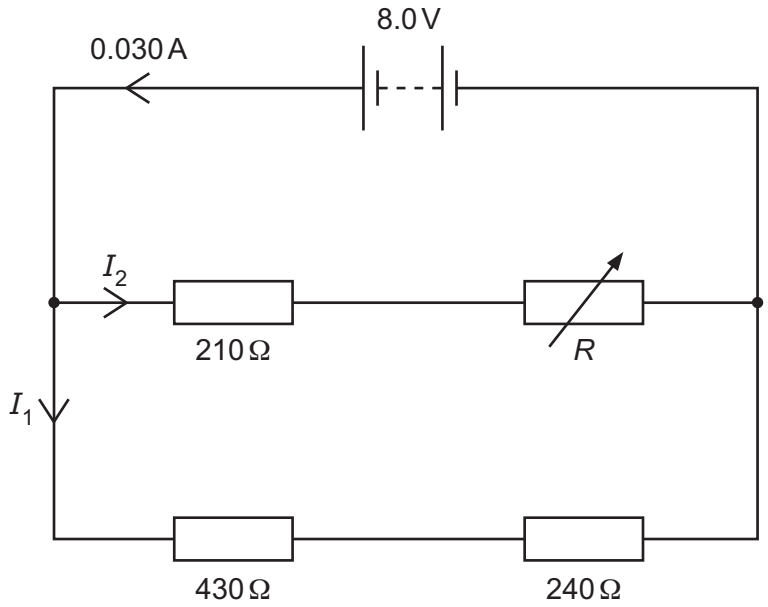

Fig. 6.1

(i) Determine the charge passing through the battery in a time of 4.0 minutes.

charge = ... C [2]

(ii) Calculate I_1.

I_1 = ... A [2]

DO NOT WRITE IN THIS MARGIN
DO NOT WRITE IN THIS MARGIN
DO NOT WRITE IN THIS MARGIN
DO NOT WRITE IN THIS MARGIN
DO NOT WRITE IN THIS MARGIN

(iii) Calculate I_2.

I_2 = ... A [1]

(iv) Determine R.

R = ... Ω [2]

DO NOT WRITE IN THIS MARGIN
DO NOT WRITE IN THIS MARGIN
DO NOT WRITE IN THIS MARGIN
DO NOT WRITE IN THIS MARGIN
DO NOT WRITE IN THIS MARGIN

(c) The variable resistor in **(b)** is fitted with a scale so that its resistance can be accurately determined.
The resistor of resistance 240 Ω is now replaced by a new resistor X of unknown resistance.
A galvanometer is connected as shown in Fig. 6.2.

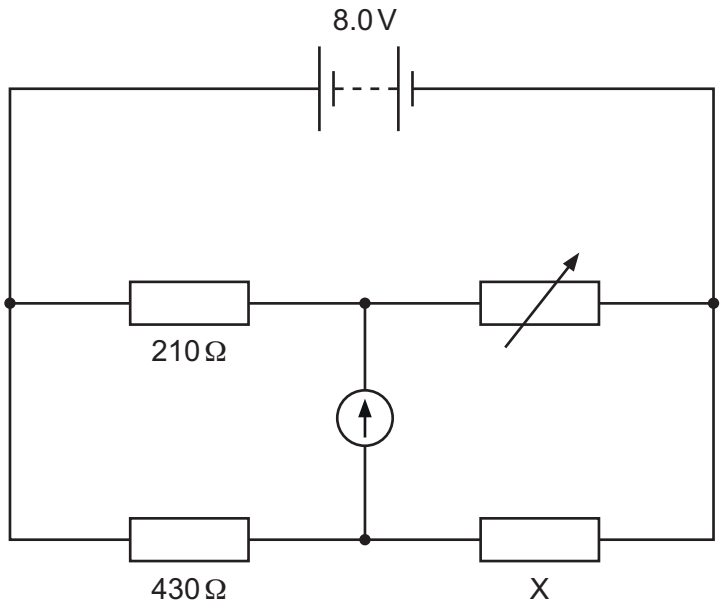

Fig. 6.2

With reference to ratios of resistances, explain how this circuit can be used to determine the resistance of X.

.....

.....

.....

.....

..... [2]

[Total: 10]

DO NOT WRITE IN THIS MARGIN
DO NOT WRITE IN THIS MARGIN
DO NOT WRITE IN THIS MARGIN
DO NOT WRITE IN THIS MARGIN
DO NOT WRITE IN THIS MARGIN

DO NOT WRITE IN THIS MARGIN
DO NOT WRITE IN THIS MARGIN
DO NOT WRITE IN THIS MARGIN
DO NOT WRITE IN THIS MARGIN
DO NOT WRITE IN THIS MARGIN

7 **(a)** State what is meant by a fundamental particle.

.....

..... [1]

(b) A nucleus X has 14 nucleons and p protons. The ratio of charge to mass for nucleus X is $4.1 \times 10^7\,\text{C kg}^{-1}$.

(i) Determine p.

p = ... [3]

(ii) Nucleus X undergoes β^- decay to form nucleus Z.

Complete the equation representing this decay.

$$^{14}_{\ldots\ldots}\text{X} \rightarrow {}^{\ldots\ldots}_{\ldots\ldots}\text{Z} + {}^{\ldots\ldots}_{\ldots\ldots}\ldots\ldots + {}^{\ldots\ldots}_{\ldots\ldots}\ldots\ldots$$

[3]

(c) A sample of a radioactive substance emits particles that are positively charged and have a continuous range of kinetic energies.

State and explain whether the nuclei in the sample are undergoing α-decay, β^+ decay or β^- decay.

.....

.....

.....

.....

.....

..... [2]

[Total: 9]



BLANK PAGE

DO NOT WRITE IN THIS MARGIN
DO NOT WRITE IN THIS MARGIN
DO NOT WRITE IN THIS MARGIN
DO NOT WRITE IN THIS MARGIN
DO NOT WRITE IN THIS MARGIN



BLANK PAGE

DO NOT WRITE IN THIS MARGIN
DO NOT WRITE IN THIS MARGIN
DO NOT WRITE IN THIS MARGIN
DO NOT WRITE IN THIS MARGIN
DO NOT WRITE IN THIS MARGIN

BLANK PAGE

DO NOT WRITE IN THIS MARGIN
DO NOT WRITE IN THIS MARGIN
DO NOT WRITE IN THIS MARGIN
DO NOT WRITE IN THIS MARGIN
DO NOT WRITE IN THIS MARGIN

Permission to reproduce items where third-party owned material protected by copyright is included has been sought and cleared where possible. Every reasonable effort has been made by the publisher (UCLES) to trace copyright holders, but if any items requiring clearance have unwittingly been included, the publisher will be pleased to make amends at the earliest possible opportunity.

To avoid the issue of disclosure of answer-related information to candidates, all copyright acknowledgements are reproduced online in the Cambridge Assessment International Education Copyright Acknowledgements Booklet. This is produced for each series of examinations and is freely available to download at www.cambridgeinternational.org after the live examination series.

Cambridge Assessment International Education is part of Cambridge Assessment. Cambridge Assessment is the brand name of the University of Cambridge Local Examinations Syndicate (UCLES), which is a department of the University of Cambridge.

© UCLES 2025